MARKETING SALES DRAWING

DIMENSIONS IN INCHES - DO NOT SCALE THIS DRAWING
DIMENSIONS IN METRIC - [ ]

Electrical Testing per Tusonix standard test plans and Mil-Std-202 Test Methods.

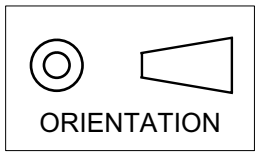

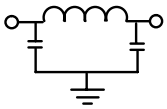

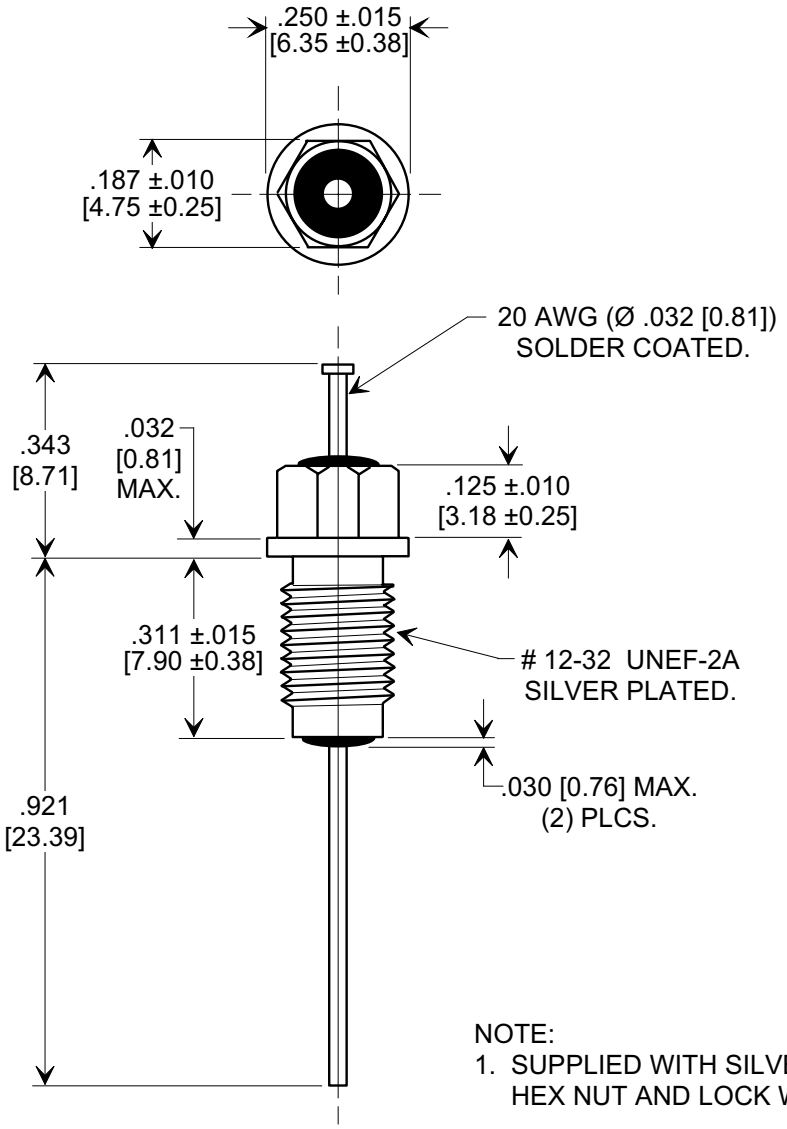

NOTE:
1. SUPPLIED WITH SILVER PLATED HEX NUT AND LOCK WASHER.

MIN. CAP. (pF)	WORKING VOLTAGE (WVdc)		CURRENT IDC	MINIMUM NO LOAD INSERTION LOSS (dB) AT 25°C PER MIL-STD -220			
	85°C	125 °C		50 MHz	100 MHz	1 GHz	10 GHz
5000	200	100	10 A	50	65	70	70

REVISION RECORD	
Original Release	0
C.O. 20070814-6-01	

X-2015 Rev-0

TOLERANCES unless otherwise specified
2 PLC. DECIMAL ± ////
3 PLC. DECIMAL ± .031 [0.79]
ANGLES ± ////

TUSONIX
TUCSON, ARIZONA

Title **M15733/61-0007 BUSHING STYLE EMI FILTER**

Drawn S.M. 08-14-07
Scale X 3
Approved T.C. 08-14-07

A **4203-552**