REVISION FOR DWG # 1PB-ALFx-yyy				
REV	CH.NO.	DESCRIPTION	DATE	REVISED BY
-	-	ORIGINAL DESIGN	11/19/2007	PHILIPP E.

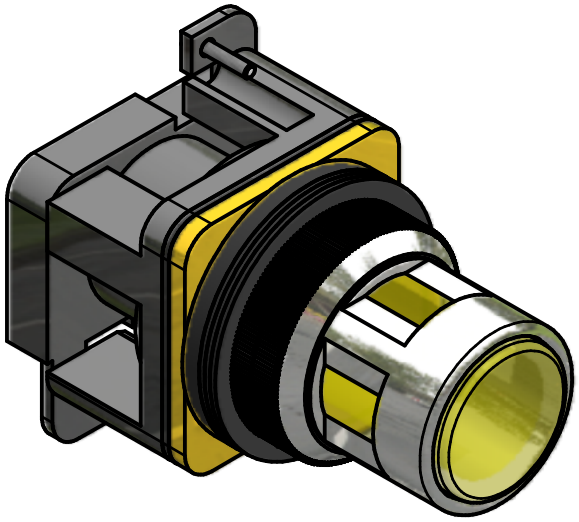

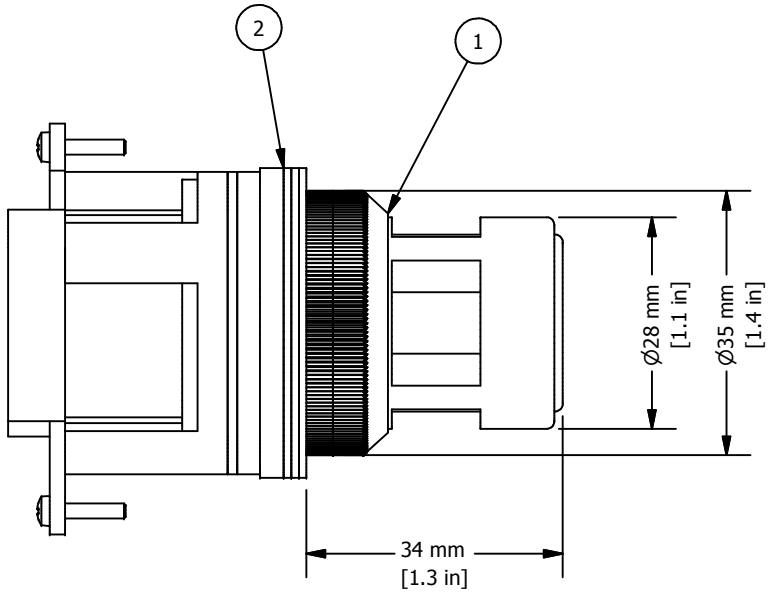

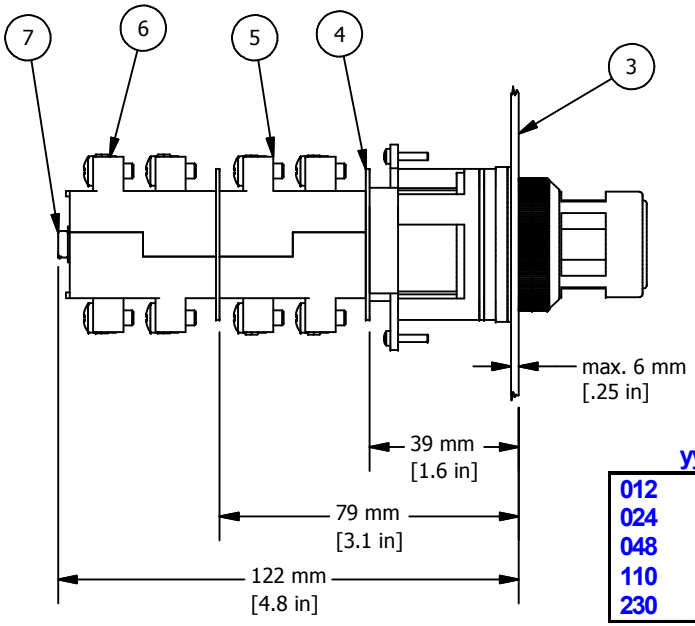

yyy = Voltage		
012	=	12V AC/DC
024	=	24V AC/DC
048	=	48V AC/DC
110	=	110V AC/DC
230	=	230V AC

* = Operator includes 3x ARW1.2 and 1x ARW3.2

** = Switch Contacts include Contact element washer and two SC24 installation screws, if more than two contact blocks are used, additional screws must be purchased seperatly (SC45, SC65 or SC90)

ITEM	DESCRIPTION	CAT. NO.	COLOR	MIN. QTY.	MAX. QTY.
1*	30 mm Illuminated Flush Momentary Metal Operator (with filament bulb or LED bulb)	ALF1-yyy or ALF1LB-yyy	White	1	1
		ALF3-yyy or ALF3LB-yyy	Green	1	1
		ALF4-yyy or ALF4LB-yyy	Red	1	1
		ALF5-yyy or ALF5LB-yyy	Amber	1	1
		ALF6-yyy or ALF6LB-yyy	Blue	1	1
		ALF7-yyy or ALF7LB-yyy	Clear	1	1
		ALF8-yyy or ALF8LB-yyy	Yellow	1	1
2*	Rubber washer	ARW1.2/ARW3.2	Black	1	4
3	Panel	-	-	-	-
4**	Contact Element washer	-	Black	1	2
5**	Switch Contacts	S11	Red	1	2
6**	Switch Contacts	S12	Yellow	1	2
7**	Contact Block Installation Screws	SC25/SC45/SC65/SC90	-	2	2

UNLESS OTHERWISE SPECIFIED:
- ALL DIMENSIONS ARE IN MILLIMETERS
- THIRD ANGLE PROJECTION

TOLERANCE		
XX	=	±1 mm
XX.X	=	±0.5 mm
XX.XX	=	±0.2 mm
ALL	=	- mm

METRIC

This Drawing is the property of
Altech Corp.®
35 Royal Road
Flemington, NJ 08822-6000
(908) 806-9400
Fax (908) 806-9490

TITEL 30 mm Illuminated Flush Momentary Operator ALFx-yyy (fillament bulb) and ALFxLB-yyy (LED bulb) (x=color; yyy=voltage)

DRAWN BY: Philipp Ernstberger	11/19/2007	DRAWING NO.: 1PB-ALFx-yyy	REV.: -
CHECKED BY: Laszlo Gyorgypal	11/19/2007		
RELEASED BY: Laszlo Gyorgypal	11/19/2007	SCALE: -	SHEET: 1 OF: 1