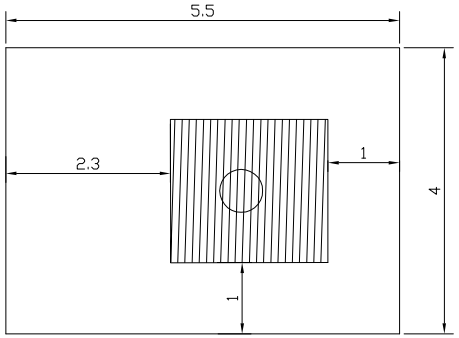

PCB Layout Recommend

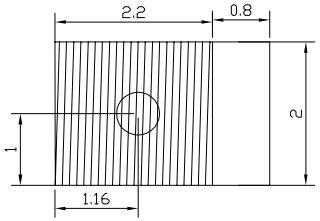

SOLDER PAD DIMENSION

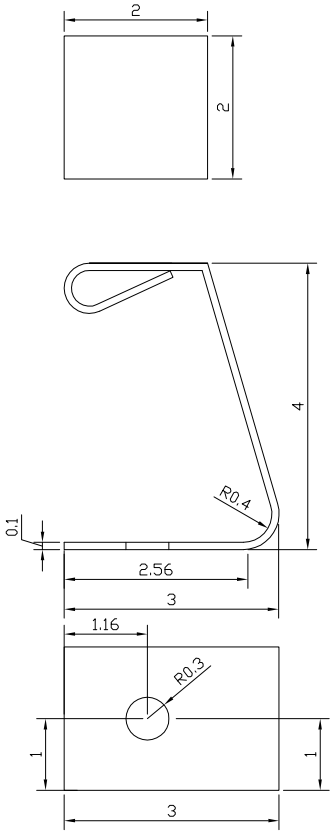

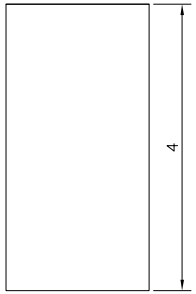

NOTE :
1.Thickness : 0.10 mm
2.The tolerance is 0.2 mm
3.The surface should be clean
4.Dimension : 2.0(W)X3.0(L)X4.0(H)

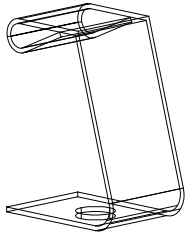

3D View

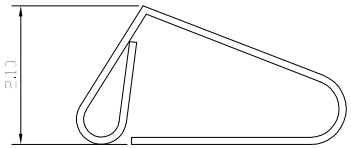

*** This file contains confidential information intended for a specific individual and purpose,and is protected by law. If you are not the intended recipient, you shouldn't own this file and are hereby notified that any disclosure,copy,or distribution of this data,or the taking of any action based on it,are strictly prohibited.

ZONE	REV	DESCRIPTION	DATE	APPD.
4				
3				
2				
1	A1	RELEASE	04/25	

STANDARD TOLARENCE EXCEPT NOTED			
1 - 6	±0.15	300 - 600	±0.80
6 - 30	±0.25	600 - 1200	±1.20
30 - 120	±0.45	1200 - 2000	±1.80
120 - 300	±0.60	ANG 90°	±1.50°

APPD:	Q'TY:	萊爾德電子材料股份有限公司	PART NAME: SMD Finger
CHKD:	SCALE: 10 : 1		
DR:	REV: A2 / UNIT: mm	PART NO: BCG-20X30X040	DWG NO:
DESIGN:		MAT'L: BeCu / FINISH: Ni / Au	