MARKETING SALES DRAWING

DIMENSIONS IN INCHES - DO NOT SCALE THIS DRAWING
DIMENSIONS IN METRIC [ ]

ORIENTATION

CIRCUIT

Electrical Testing per Tusonix standard test plans and Mil-Std-202 Test Methods.

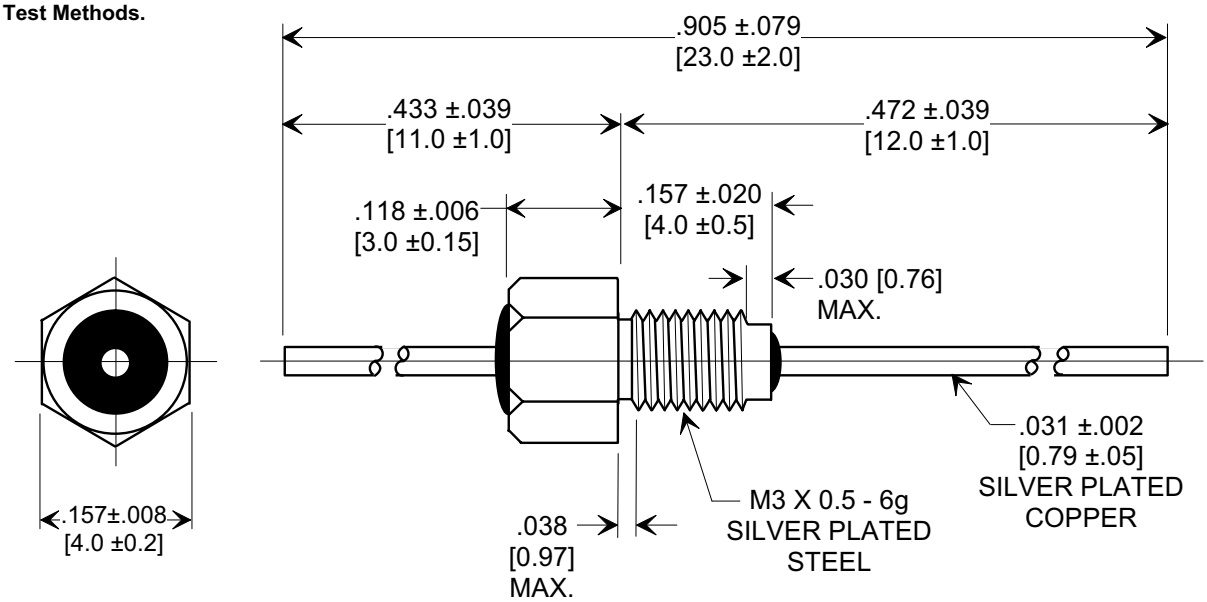

MOUNTING HARDWARE

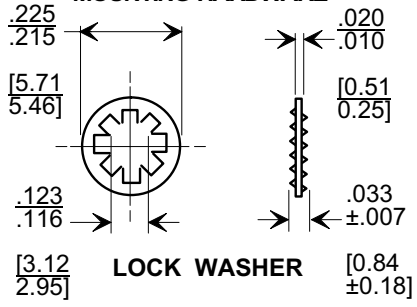

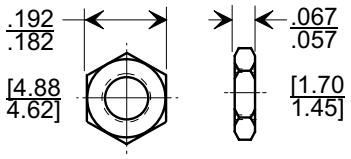

HEX NUT

NOTES:
1. OPERATING TEMP. RANGE: -55°C TO +125°C.
2. SUPPLIED WITH SILVER PLATED HEX NUT AND LOCK WASHER.
3. MAX. RECOMMENDED MOUNTING TORQUE : 0.23 Nm.
4. MAX. RECOMMENDED SOLDERING TEMPERATURE : 260° C. SEE INSTALLATION RECOMMENDATIONS.
5. TUSONIX TRADEMARK AND PART VARIATION NUMBER STAMPED ON HEX FLATS. STANDARD PART: BLACK INK. RoHS PART: GREEN INK.
6. TUSONIX STANDARD PART NUMBER: 4400-076. TUSONIX RoHS COMPLIANT PART NUMBER: 4400-076 LF. CUSTOMER MUST SPECIFY STANDARD OR RoHS PART NUMBER WHEN ORDERING.

CAP.(pf)	TOLERANCE	DC WORKING VOLTAGE		DC CURRENT (AMPS)	DWV (VDC)	MIN. NO LOAD INSERTION LOSS (db) @ 25°C PER MIL-STD-220				
		85°C	125 °C			1 MHz	10 MHz	100 MHz	1 GHz	10 GHz
100	GMV	300	200	10	500	----	----	3	20	28

REVISION RECORD		
0	Original Release C.O. **19990426-3-02**	
1	ADDED HEX NUT (2) PLCS. S.M. 01-07-00	**20000104-1-05**
2	ADDED NOTE 6 & REVISED NOTE 5. S.M. 11-02-06	**20061031-3-02**

X-2015 Rev-0

--TOLERANCES-- Unless Otherwise Specified

DECIMAL ± NOTED

ANGLES ±

TUSONIX
TUCSON, ARIZONA

Title
BUSHING STYLE EMI FILTER

Drawn **S.M. 04-30-99**
Scale **5 X**
Approved **J.Mc. 04-30-99**

A **4400-076**