µPDB Module System Product Specification

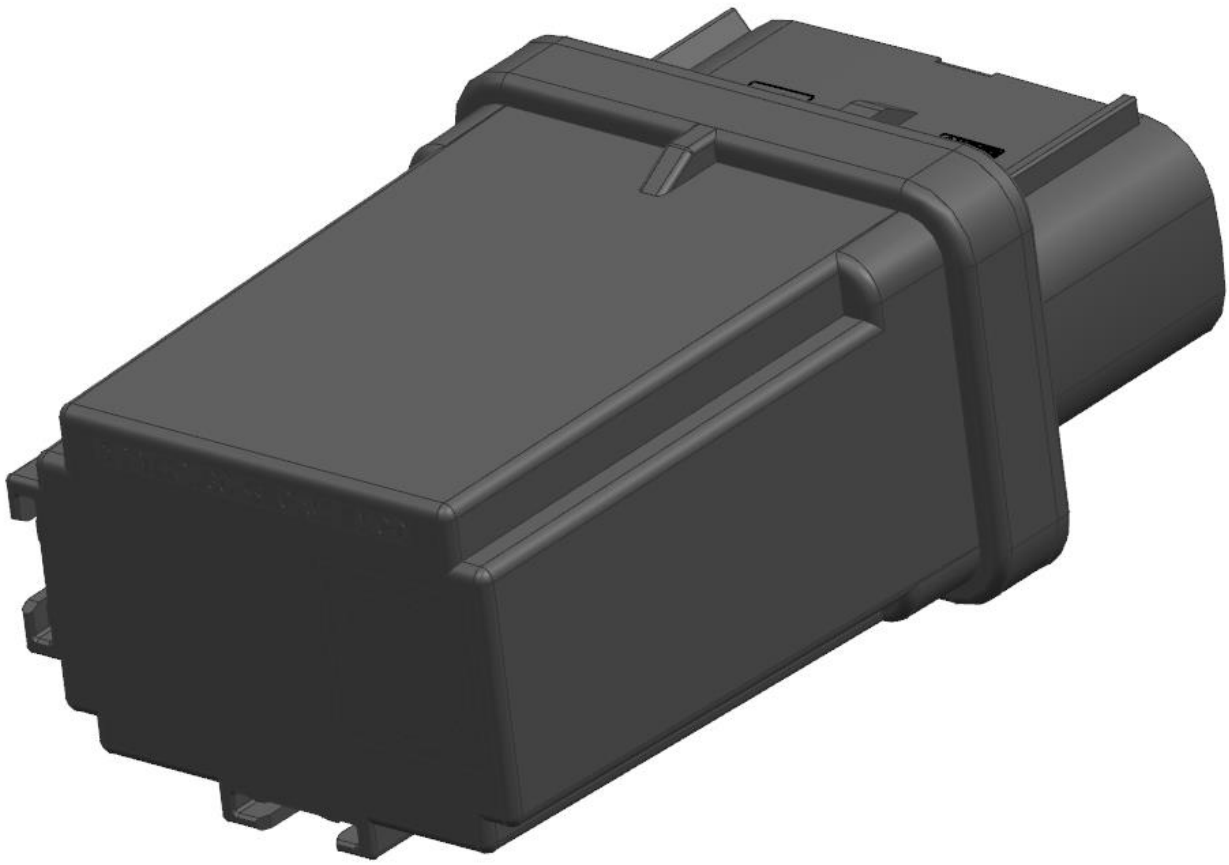

REVISION:	ECR/ECN INFORMATION:	TITLE:	SHEET No.
D	EC No: 650978 DATE: 12/17/2020	µPDB General Market Product Specification	1 of 17

DOCUMENT NUMBER:	CREATED / REVISED BY:	CHECKED BY:	APPROVED BY:
2003161000PS	Scott Walker	Matthew Young	Kushan Vasant

Table of Contents

1.0 SCOPE

This Product Specification covers the relay and fuse µPDB modules that utilize the MX150 hybrid (8, 9, 10 way) connector system. This module family has a large variety of connectivity and capability options depending on the users needs.

2.0 PRODUCT DESCRIPTION

2.1 Module Exploded view

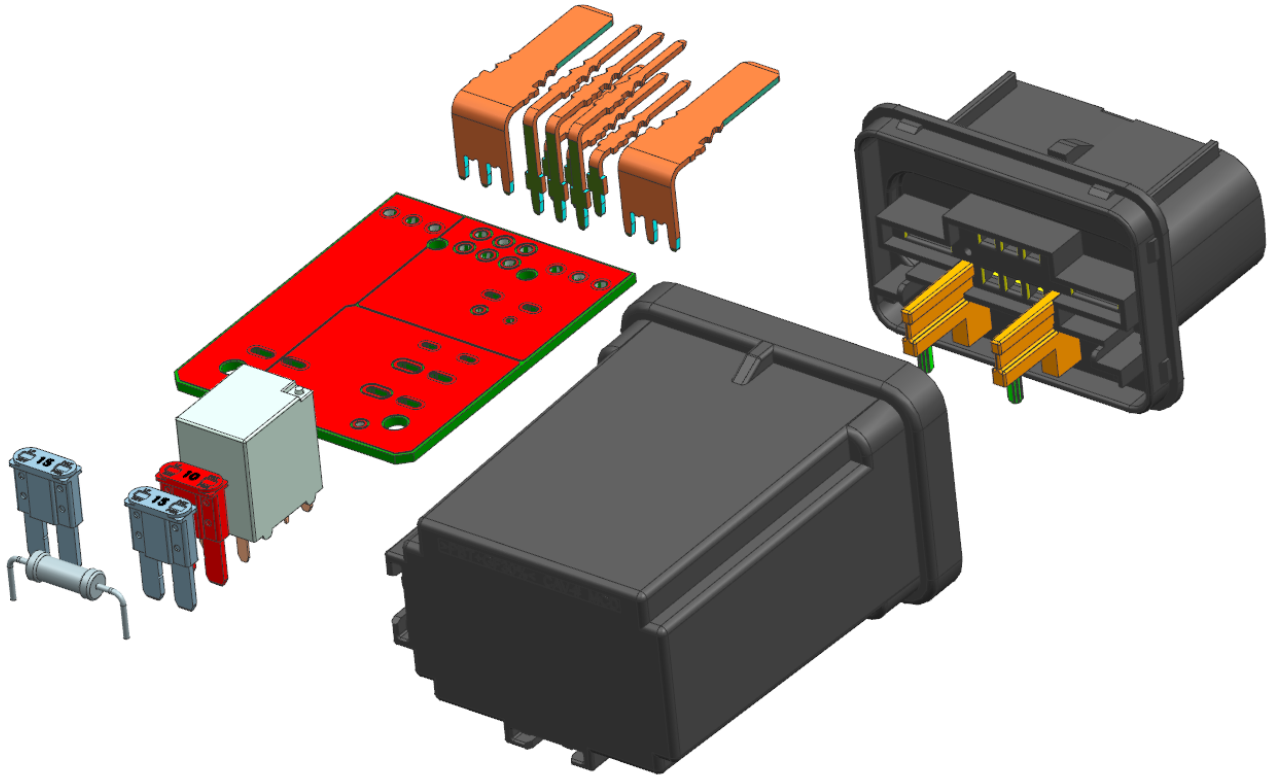

Exploded View of Example Module (Internal Components shown Left to Right: Board Components, PCB, Header Blades, Module Cover, Header Shroud)

2.2 System view

Un-Assembled Module and Connector

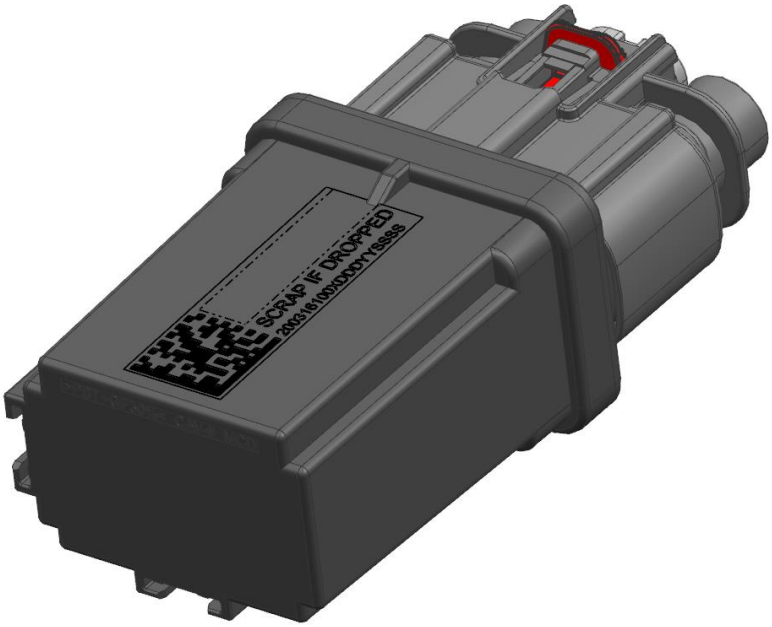

Assembled Module and Connector

2.3 Product Summary

Part Number	Description	Example Applications	Figure	Page Number
2003161101	1 Relay 1 Resistor	-Cooling Fan -Blower Motor -Headlights -Convertible Car Roof Control	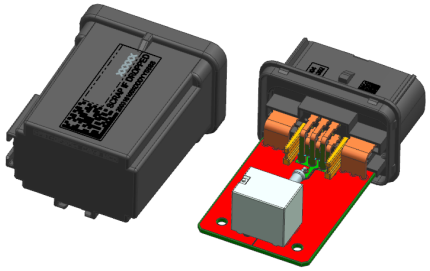	6
2003161102	1 Relay 1 Slow Blow Fuse 1 Resistor	-All Wheel Drive Module -Headlights -Aftermarket Headlights -Front/Rear Defogger -Power Liftgate	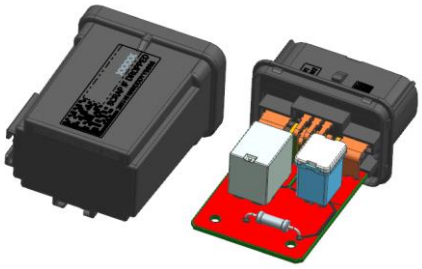	7
2003161103	1 Relay 3 Fast Blow Fuses 1 Resistor	-UREA System (Module, Pump Heater, Line Heater) -Wiper Motor (Two Loads) -Tail Lights (Two/Three Loads) -Day Light Running Light (DRL)	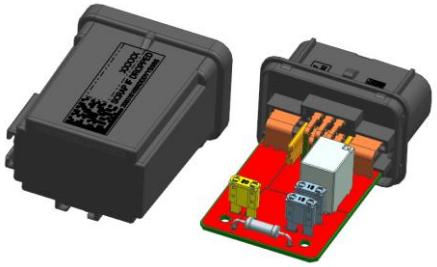	8
2003161121	2 Relays 4 Fast Blow Fuses 1 Resistor	-4 CYL Diesel Engine Glow Plugs (Can Combine Multiple Modules for 6 and 8 CYL) -Day Light Running Light (DRL)	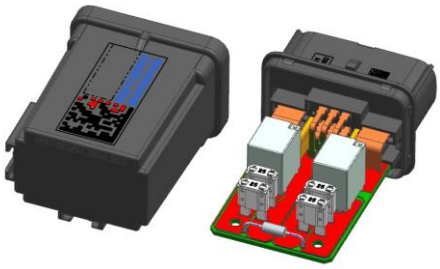	9
2003161122	2 Relays 4 Fast Blow Fuses 1 Resistor	-4 CYL Diesel Engine Glow Plugs (Can Combine Multiple Modules for 6 and 8 CYL) -Day Light Running Light (DRL)	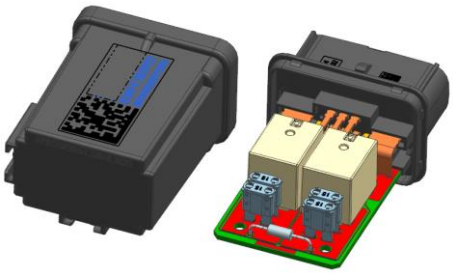	10

3.0 Performance

3.1 1 Relay, 1 Resistor Module Product Page

HIGH LEVEL MODULE DATA	
Part number	2003161101
Operating Voltage	7.3-16V DC
Current Ratings	42A @ +110°C 48A @ +85°C
Fuse rating	N/A
Temperature Class	-40°C to 110°C
Sealing Class	IP6K7
Vibration Class	Body/Chassis Mount (Engine Bay Capable)
Connectivity	2x6.35mm / 2x1.5mm / 4x1.5mm (blocked)
Mating Connector P/N	160078-3024 (Molex)

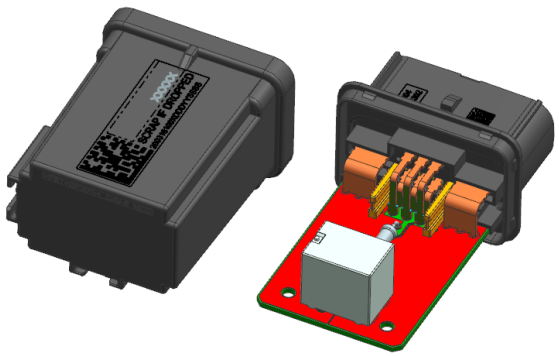

Partial Exploded View of 1 Relay, 1 Resistor Module

SCHEMATIC

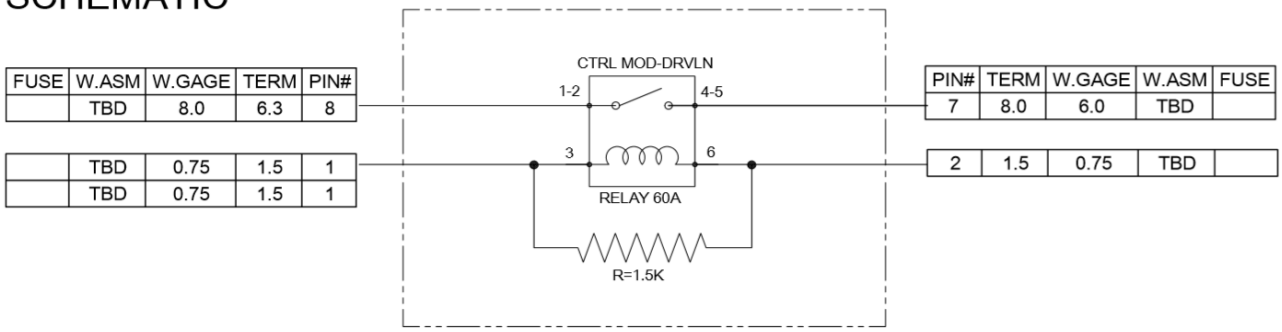

3.2 1 Relay, 1 Slow Blow Fuse, 1 Resistor Module Product Page

HIGH LEVEL MODULE DATA	
Part number	2003161102
Operating Voltage	7.3-16V DC
Current Ratings	25A @ +110°C 30A @ +85°C
Fuse rating	LP J-Fuse: #7-40A
Temperature Class	-40°C to 110°C
Sealing Class	IP6K7
Vibration Class	Body/Chassis Mount (Engine Bay Capable)
Connectivity	2x6.35mm / 2x1.5mm / 4x1.5mm (blocked)
Mating Connector P/N	160078-3022 (Molex)

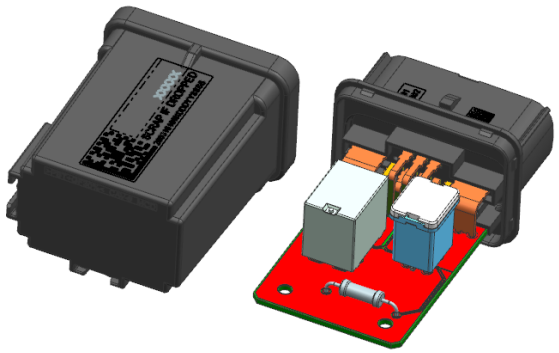

Partial Exploded View of 1 Relay, 1 Slow Blow Fuse, 1 Resistor Module

SCHEMATIC

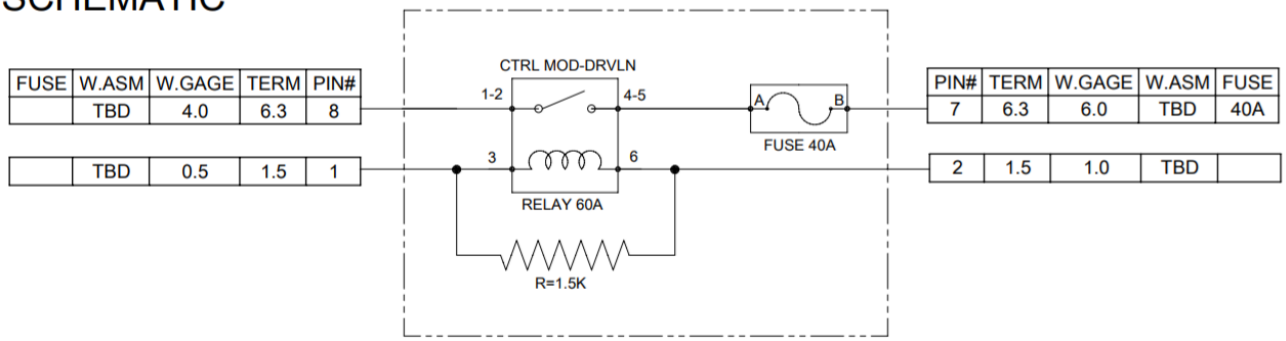

3.3 1 Relay, 3 Fast Blow Fuses, 1 Resistor Module Product Page

HIGH LEVEL MODULE DATA	
Part number	2003161103
Operating Voltage	7.3-16V DC
Current Ratings	Load 1-7.5A @ +85°C (De-rates @ +110°C) Load 2-6A @ +85°C (De-rates @ +110°C) Load 3-7.5A @ +85°C (De-rates @ +110°C)
Fuse rating	Micro-2: #8-20A, #2-15A, #1-15A
Temperature Class	-40°C to 110°C
Sealing Class	IP6K7
Vibration Class	Body/Chassis Mount (Engine Bay Capable)
Connectivity	2x6.35mm / 3x1.5mm / 3x1.5mm (blocked)
Mating Connector P/N	160078-3026 (Molex)

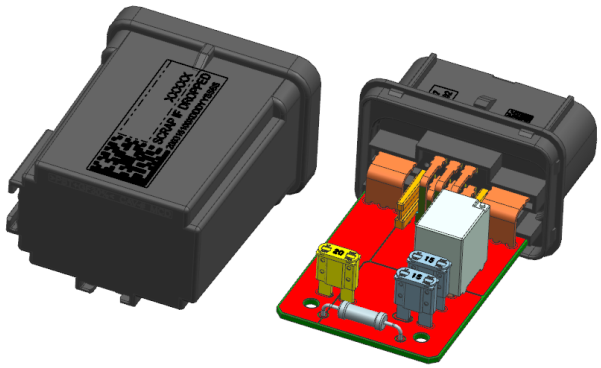

Partial Exploded View of 1 Relay, 3 Fast Blow Fuses, 1 Resistor Module

SCHEMATIC

FUSE	W.ASM	W.GAGE	TERM	PIN#
	TBD	6.0	6.3	7

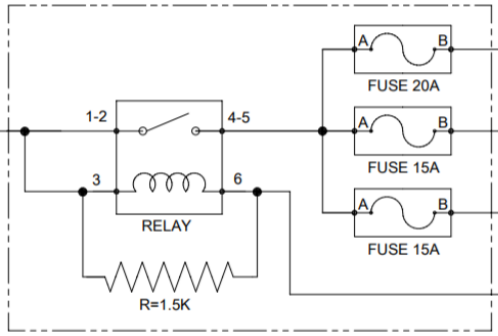

PIN#	TERM	W.GAGE	W.ASM	FUSE
8	6.3	3.0	TBD	20A
2	1.5	1.5	TBD	15A
3	1.5	1.5	TBD	15A
1	1.5	0.35	TBD	

3.4 2 Relays, 4 Fast Blow Fuses, 1 Resistor Module Product Page

HIGH LEVEL MODULE DATA	
Part number	2003161121
Operating Voltage	7.3-16V DC
Current Ratings	Load 1-7.5A @ +15°C (De-rates @ +110°C) Load 2-7.5A @ +15°C (De-rates @ +110°C) Load 3-7.5A @ +15°C (De-rates @ +110°C) Load 4-7.5A @ +15°C (De-rates @ +110°C)
Fuse rating	Micro-2: 4 x 25A
Temperature Class	-40°C to 110°C
Sealing Class	IP6K7
Vibration Class	Body/Chassis Mount (Engine Bay Capable)
Connectivity	2x6.35mm / 4x1.5mm
Mating Connector P/N	160078-3006 (Molex)

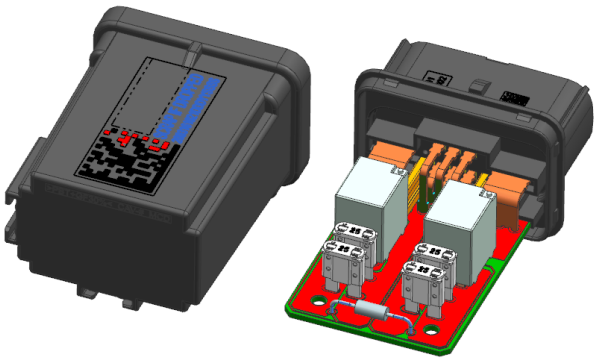

Partial Exploded View of 2 Relays, 4 Fast Blow Fuses, 1 Resistor Module

SCHEMATIC

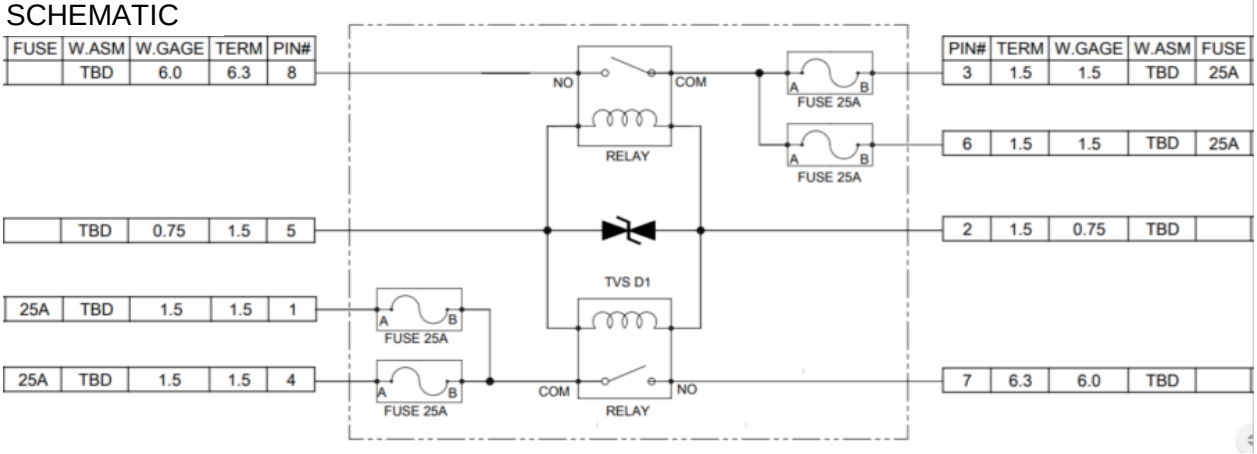

PRODUCT SPECIFICATION

3.5 2 Relays, 4 Fast Blow Fuses, 1 Resistor Module Product Page

HIGH LEVEL MODULE DATA	
Part number	2003161122
Operating Voltage	7.3-16V DC
Current Ratings	Load 1-4A @24V @ +15°C (De-rates @ +110°C) Load 2-4A @24V @ +15°C (De-rates @ +110°C) Load 3-4A @ 24V @ +15°C (De-rates @ +110°C) Load 4-4A @ 24V @ +15°C (De-rates @ +110°C)
Fuse rating	Micro-2: 4 x 15A
Temperature Class	-40°C to 110°C
Sealing Class	IP6K7
Vibration Class	Body/Chassis Mount (Engine Bay Capable)
Connectivity	2x6.35mm / 4x1.5mm
Mating Connector P/N	160078-3007 (Molex)

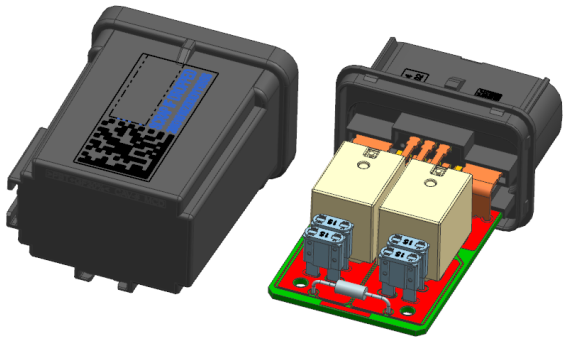

Partial Exploded View of 2 Relays, 4 Fast Blow Fuses, 1 Resistor Module

SCHEMATIC

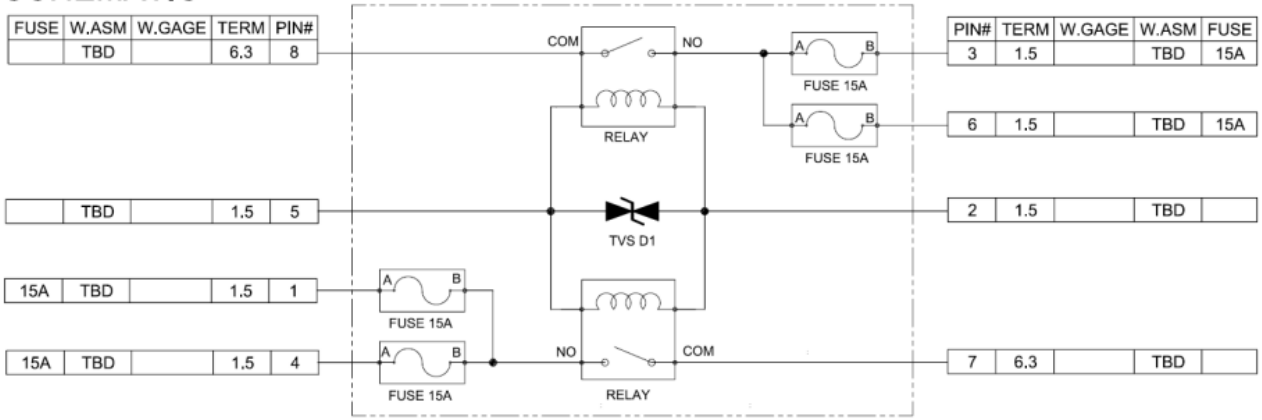

REVISION:	ECR/ECN INFORMATION:	TITLE:	SHEET No.
D	EC No: 650978 DATE: 12/17/2020	µPDB General Market Product Specification	10 of 17

DOCUMENT NUMBER:	CREATED / REVISED BY:	CHECKED BY:	APPROVED BY:
2003161000PS	Scott Walker	Matthew Young	Kushan Vasant

4.0 INTEGRAL COMPONENTS AND ACCESSORIES

4.1 Connector Options

The µPDB module (depending on the configuration) accepts an 8-way, 9-way, or 10-way MX150 hybrid connector. The correct connection option is specified on each module's product page.

Description	Number of Circuits			Series Number	Document Number
	1.5mm	2.8mm	6.35mm		
MX150 8-way Hybrid Sealed Connector (Molex)	6	0	2	160078	SD-160076-0001 SD-160076-0002
MX150 9-way Hybrid Sealed Connector (Molex)	6	2	1	160080	
MX150 10-way Hybrid Sealed Connector (Molex)	6	4	0	160076	

4.2 Mounting Clip Options

The µPDB module accepts standard USCAR 11mm mounting clips per EWCAP-005 Rev D. Molex Engineering recommends mounting clips with oval style geometry or something equivalent for the best retention and location performance.

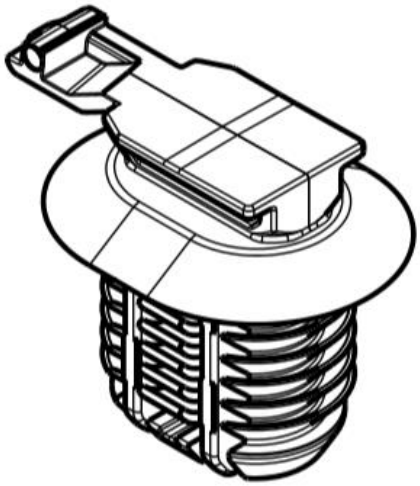

Example of Oval Geometry Mounting Clip

Molex Recommended or Equivalent Mounting Clip Table

Component Description	HellermannTyton P/N
Connector Clip, Mounting Hole Dia. 9.0–17.0mm	151-01144
Connector Clip w/Oval Fir Tree, 0.6 - 6.0 mm Panel Thickness, Hole Dia. 6.2–13.0mm	151-00925
Connector Clip, Mounting Hole Dia. 12.0–17.0mm	151-01199

5.0 APPLICABLE DOCUMENTS

Document Title	Document Number
UL File Number	Not Applicable
CAS File Number	Not Applicable
TUV License Number	Not Applicable
IMDS Report	TBD
Environmental Compliance	IPC-6012
Module Application Specification	2003161000AS
Connector Product Specification	1600760001-PS
Connector Application Specification	1601110001-AS

6.0 RATINGS

6.1 Flammability

Module	**Flammability Rating**
2003161101	UL 94-HB
2003161102	UL 94-HB
2003161103	UL 94-HB
2003161121	UL 94-HB
2003161122	UL 94-HB

7.0 General Performance

7.1 Electrical Performance

No.	**Test Name**	**Test Spec.**	**Performance**	**Requirements**
1	EMC/Electrical Environment	FMC-1278	**Met**	Components shall not produce transient voltage magnitudes as well as be immune from potential voltage overstress.
2	100% Continuity Test	ESGU5T-14A067-AB	**Met**	Continuity through each circuit.
3	135% Short Circuit Test	ESGU5T-14A067-AB	**Met**	No plastic flow or terminal fusing
4	135% Fuse/Circuit Breaker Load Test	ESGU5T-14A067-AB	**Met**	Open circuit within specified circuit protection guideline No plastic flow or terminal fusing
5	Dielectric Test	ESGU5T-14A067-AB	**Met**	Leakage Current < 1mA
6	Insulation Resistance Test	ESGU5T-14A067-AB	**Met**	Insulation Resistance > 10MΩ

7.2 Mechanical Performance

No.	Test Name	Test Spec.	Performance	Requirements
1	Connector Mating and Un-Mating Force	USCAR-25 GMW3172 ESGU5T-14A067-AB	**Met**	Mating Force: ≤75N Un-Mating Force: ≥110N
2	Terminal Retention Force	ESGU5T-14A067-AB	**Met**	Terminal Retention Force: 2.8 & 6.3 Blade: Min. 112N 1.5 Blade: Min. 75N
3	Drop Test	ESGU5T-14A067-AB CETP 00.00-E-412	**Met**	Pass 100% Continuity Test and no audible RBS
4	Insertion / Extraction Force: Clip into Clip Slot	USCAR-2 Rev 5	**Met**	Engage Force: < 60N Disengage Force: > 110N
5	Mounting Force to Bracket	ESGU5T-14A067-AB	**Met**	Engage Force: ≤90N

7.3 Sealing Performance

No.	Test Name	Test Spec.	Performance	Requirements
1	Component Cover Retention Force	ESGU5T-14A067-AB	**Met**	Retention Force: ≥ 220N

7.4 Environmental Performance

No.	Test Name	Test Spec.	Performance	Requirements
1	Thermal Shock Resistance Test	ESGU5T-14A067-AB CETP 00.00-E-412	**Met**	Voltage drop shall not exceed (1.0 mV/A) * (Number of Crimps) + (2.0 mV/A) * (Number of Interfaces) No visible cracks, distortions Remove / Reinstall connector 20 times. No degradation performance
2	Low Temperature Exposure Test	ESU5T-14A067-AB CETP 00.00-E-412	**Met**	No visible cracks, distortions Remove / Reinstall connector 20 times. No degradation performance
3	High Temperature Exposure Test	ESGU5T-14A067-AB CETP 00.00-E-412	**Met**	No visible cracks, distortions Remove / Reinstall connector 20 times. No degradation performance
4	Humidity – Temperature Cycle Test	ESGU5T-14A067-AB CETP 00.00-E-412	**Met**	Voltage drop shall not exceed (1.0 mV/A) * (Number of Crimps) + (2.0 mV/A) * (Number of Interfaces) No visible cracks or distortion Max. Leak Current < 1mA
5	Dust Test	ESGU5T-14A067-AB CETP 00.00-E-412	**Met**	Voltage drop shall not exceed (1.0 mV/A) * (Number of Crimps) + (2.0 mV/A) * (Number of Interfaces)
6	Salt Spray Test	ESGU5T-14A067-AB CETP 00.00-E-412	**Met**	Max. Leak Current < 1mA Voltage drop shall not exceed (1.0 mV/A) * (Number of Crimps) + (2.0 mV/A) * (Number of Interfaces)
7	Heavy Splash/Shower Test	ESGU5T-14A067-AB CETP 00.00-E-412	**Met**	Max. Leak Current < 1mA
8	Water Dump Test	ESGU5T-14A067-AB CETP 00.00-E-412	**Met**	No evidence of water intrusion into areas of PCB in the Micro PDB
9	Chemical Resistance Test	ESGU5T-14A067-AB	**Met**	Max. Leak Current < 1mA No degradation in the performance No crack, flake, bubble or deterioration in the plastic
10	Vibration Test (Body Mount Profile: Engine Bay Capable)	ESGU5T-14A067-AB	**Met**	There shall be no breakage or degradation in the design-intended performance Shake the EDB vigorously in 3 directions, there shall be no audible rattle, buzzes, or squeaks Test proper continuity through each circuit (100% Continuity Test)

8.0 PACKAGING

Parts shall be packaged to protect against damage during handling, transit and storage.

Part #	Carton #	Partition #	Pad #	Bag #	QTY/ Bag	Bags/ Partition	QTY/ Partition	Partitions/ Carton	Pads/ Carton	QTY/ Carton	Cartons/ Pallet	SPQ	MOQ
20031611XX	477991201	2003169300	2003169301	2003169302	1	24	24	4	5	96	32	96	3072

Molex Drawing No: PK-2003168103

Max. Q'ty: 96 Pcs / Carton Box
Total 4 Layers / Carton (with 24 Cells per Layer)

PARTITION: 24 CELLS

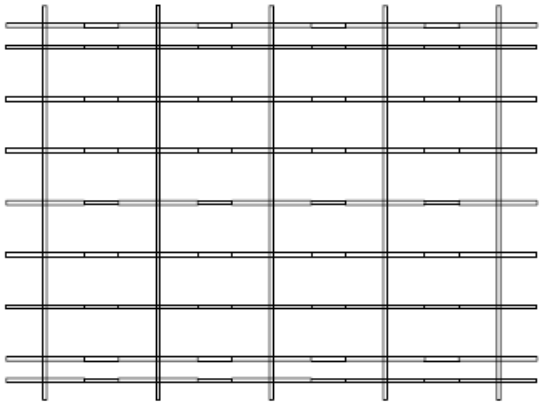

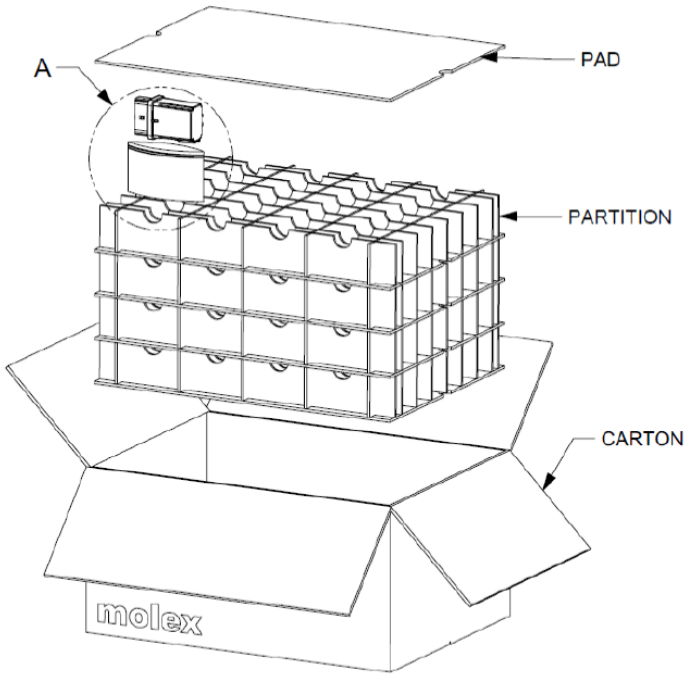

8.1 External Dimensions

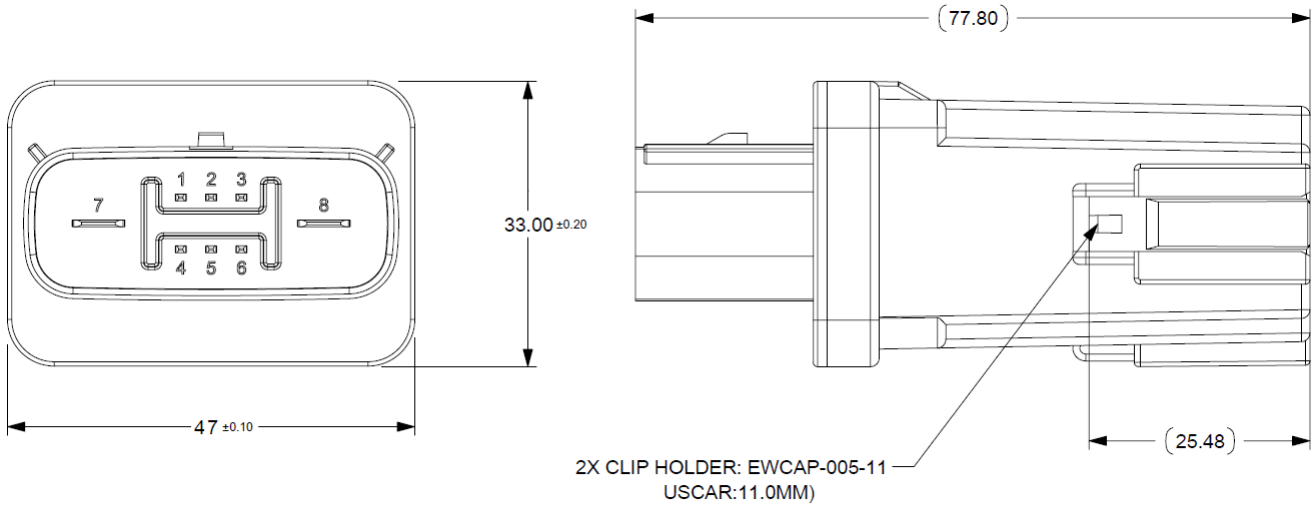

8.2 Traceability

Traceability Laser Marking:

- 2D Data Matrix Code (2D DMC)
  - Marking and reading standard: Data Matrix (ECC200)
  - 14mm x 14mm Size
  - Information to be encoded:
    - PPPP = Last Four Digits of Molex Part Number
    - YY = Year
    - DDD = Day of the Year
    - SSSS = Incremental Serial Number
- Human Readable Code (HRC)
  - 10 Digits Molex Part Number
  - 5 Digits Julian Manufacturing Date (DDDYY)
  - 4 Digits Incremental Serial Number

9.0 GAGE AND FIXTURES

All applicable gages and fixtures are referenced in the appropriate control plans.

10.0 ADDITIONAL INFORMATION

To ensure compliance with our product validation, it is imperative that our product meets the drawing specifications. Any non-conformance with the key functional dimensions or mating interface will create performance failures.