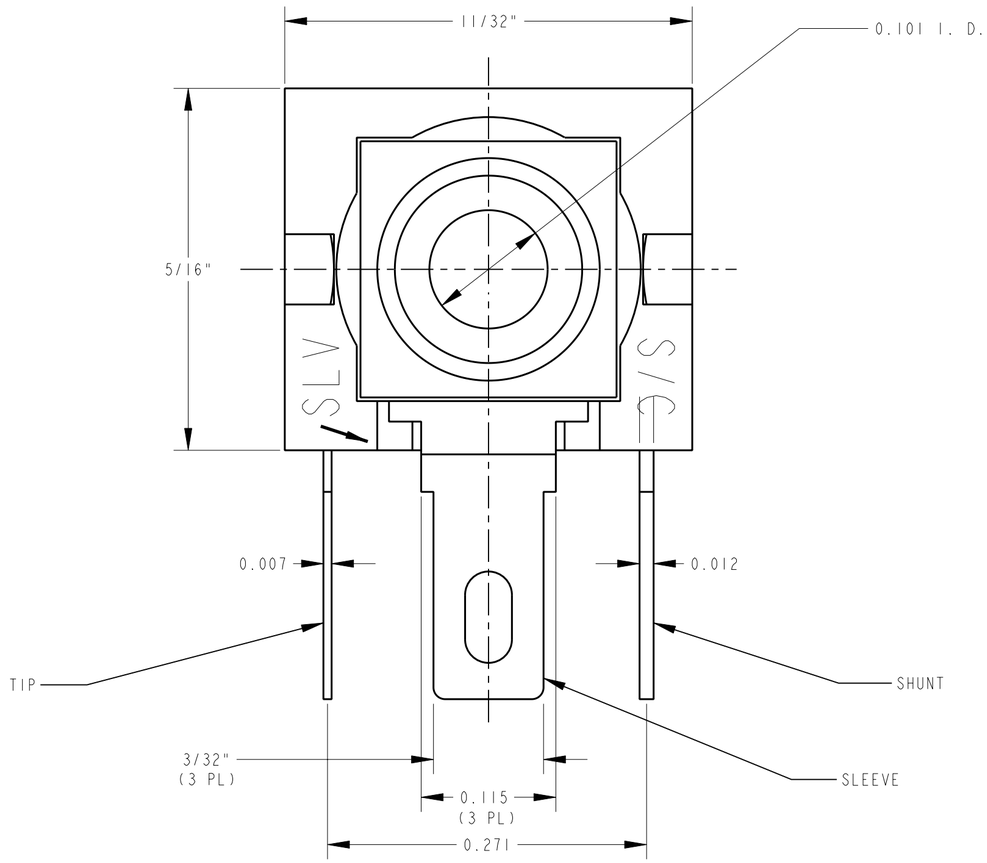

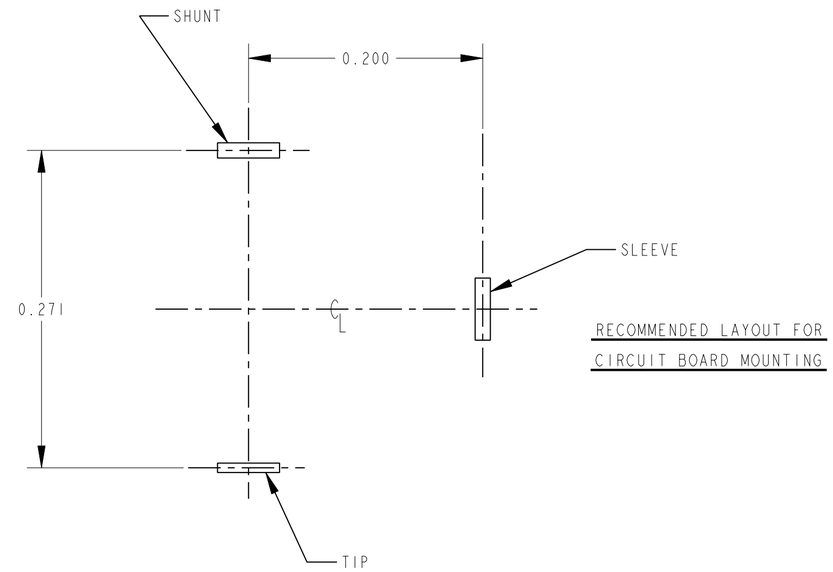

RECOMMENDED LAYOUT FOR
CIRCUIT BOARD MOUNTING

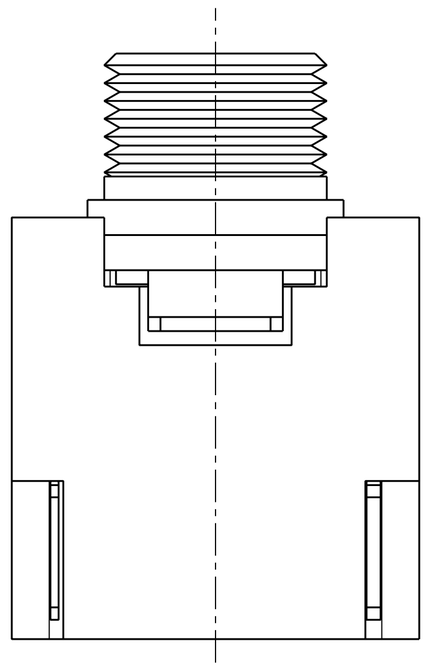

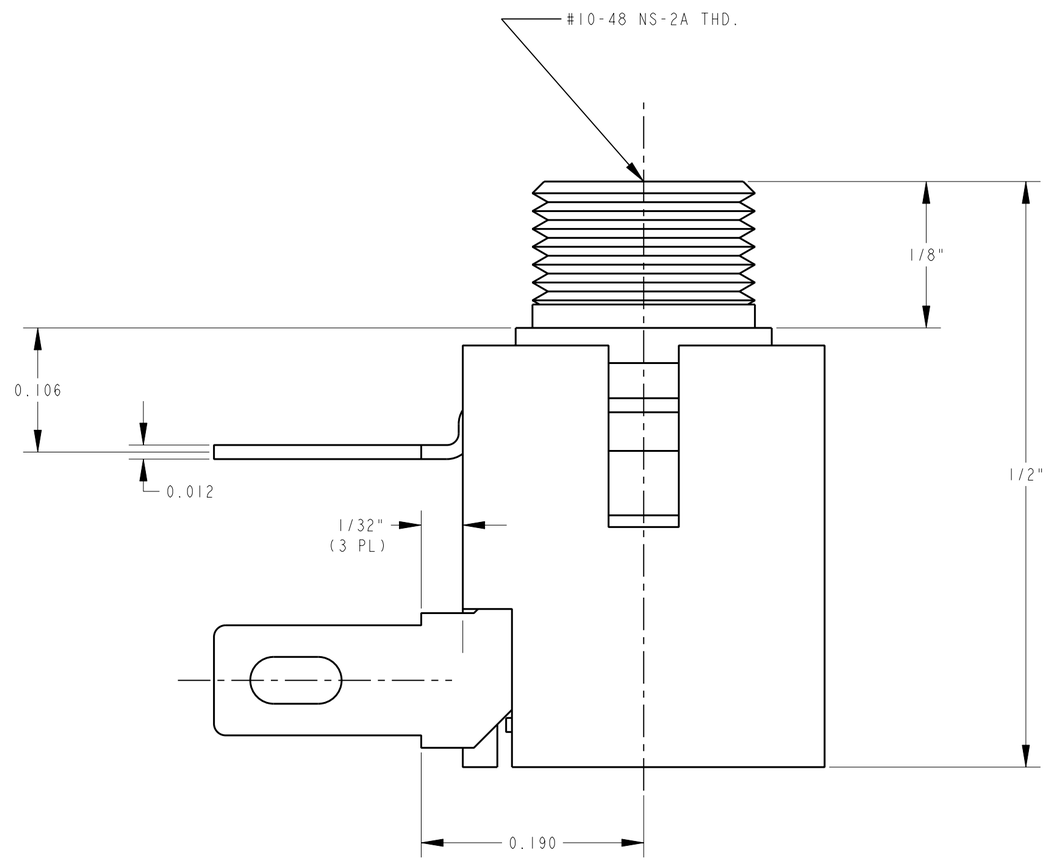

NOTES:

1. ALL DIMENSIONS ARE FOR REFERENCE ONLY.
2. HARDWARE SHIPPED UNASSEMBLED.

MATERIAL:

HOUSING: GLASS FILLED NYLON
BUSHING & MTG. HARDWARE: NICKEL PLATED BRASS
SLEEVE & SHUNT TERMINALS: SILVER PLATED COPPER ALLOY
TIP TERMINAL: SILVER PLATED BERYLCO 25

CUSTOMER DRAWING

CAD/CAM DWG. NO.

s.mdsl2ara_cd

SHEET 1 OF 1

ISSUE	CHANGE NO.	DATE	BY	APP'D
D	ECO #20214	12-20-95	DEA	TAO
C	ECO #20213	12-20-95	DEA	TAO
B	REDRAWN ON CAD ECO #20211	12-20-95	DEA	TAO

REVISIONS

☆ STAR SYMBOL DENOTES CRITICAL DIMENSION, SEE S/C ENGINEERING STANDARD ES-0001

UNLESS OTHERWISE SPECIFIED

1. ALL DIMENSIONS IN INCHES
   TWO PLACE DECIMAL ±.01
   THREE PLACE DECIMAL ±.005
   FRACTIONAL DIMENSIONS ±1/64
   ANGLES ±1/2°
   ALL DIA'S CONCENTRIC WITHIN .005 T.I.R.
2. REMOVE ALL BURRS
3. MAKE NO DIMENSIONAL ALLOWANCES FOR APPLIED FINISHES, I.E., PLATING, PAINTING, ETC.
4. HOLES ON THE SAME CENTERLINE MUST BE ALIGNED WITHIN ±.002

DO NOT SCALE DRAWING

THIS DRAWING DESCRIBES A DESIGN CONSIDERED PROPRIETARY IN NATURE, DEVELOPED AND MANUFACTURED BY SWITCHCRAFT INC. AND IS RELEASED ON A CONFIDENTIAL BASIS FOR IDENTIFICATION PURPOSE ONLY.

SIZE	WIDTH	MULT	LBS./M	TEMPER
-	-	-	-	-

FINISH -	MATERIAL -
SPEC. NO. -	SPEC. NO. -
FIRST USED ON -	SCALE 1 = 0.1

DATE DRAWN	BY	CHK'D	APP'D
2-9-76	FGD	JRH 1-28-77	LG 1-28-77

Switchcraft®

NAME	PART NO.	ISSUE
MICRO D JAX	MDSL2ARA	D

C ROUTING