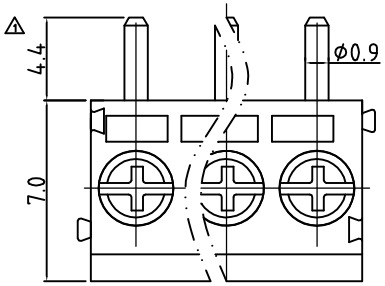

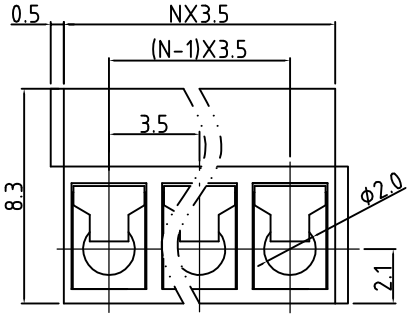

N=Number of contacts

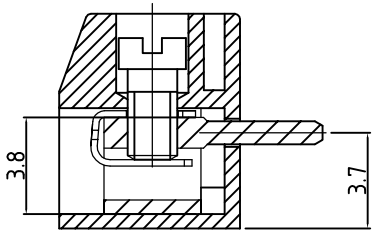

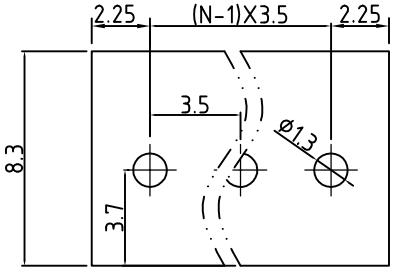

P.C.B. LAYOUT

Technical Data:

Electrical

- Pitch: 3.5mm
- Voltage rating: 150V
- Current rating: 10 Amps
- Contact resistance: 20mΩ(max)
- Withstanding Voltage: 2500VAC(1min) Test time=60sec/1pcs
- Wire range: 16-30AWG
- Wire strip length: 5-6mm

Mechanical:

- Torque: 2.0kgf.cm/M2
- Operating temperature: -40°C to +105°C
- Soldering temperature:
- Temperature= 250°C±10°C /5 seconds max
- Safety approval:
- RoHS Compliance

Part No.:

OSTTFXX0161

No. of Poles		COLOR
02	2 Poles	0: Black
03	3 Poles	2: Red
...	...	3: Orange
24	24 Poles	4: Yellow
		5: Green
		6: Blue (Standard)
		8: Grey

Nonstandard colors
Mins could apply

ITEM	NAME OF PART	MATERIAL	NOTES	Q"TY
4	Screw	Steel / M2.0	Cr3+ plated	1×N
3	Wire guard	Stainless steel		1×N
2	Terminal	Copper Alloy	Tin plated	1×N
1	Body	PA66 UL94V-0		1

REV	SIGN	DESCRIPTION	CHK.	DATE
20.04.08	1	Updated pin length		

DWG.		DATE	UNITS:	MM	SHEET: 1 OF 1
CHK.		DATE	SCALE:	NONE 5:1 (:)	REV.: A
APP.		DATE	TITLE:	OSTTF SERIES 3.5MM	
			PART NO.	OSTTFXX0161	
			DWG NO.	OSTTFXX0161.DWG	

ON-SHORE TECHNOLOGY, INC.

Tolerance

X.	±0.50
X.X	±0.30
X.XX	±0.10
X°	±1°